LiGHT SKY



AURORA AQUA

OUTDOOR LAMP MOVING
BSW 3 IN 1

FEATURES

- AURORA AQUA is a waterproof three-in-one lamp integrating beam, wash, and Gobo effects into a single moving head fixture.
- Unique and innovative Dynamic Thermal Control System (DTCS™) ensures stable operation.
- High-precision optical system with a 160mm diameter output lens provides long-distance projection, high illuminance, solid beam, uniform spot, and clear gobos.
- The gobo module includes a rotating gobo wheel and a fixed gobo wheel, offering a variety of gobos with high consistency in clarity and color from center to edge.
- Built-in with 5 prisms, capable of endless effects transformation.
- Delivers an impressive illuminance of 620,000 lx @ 10 meters.
- Compact size and lightweight design, accurate horizontal and vertical positioning, and fast response time.
- Ideal for high-end performance venues such as outdoor events,cultural tourism performances, large concerts, and stadiums.

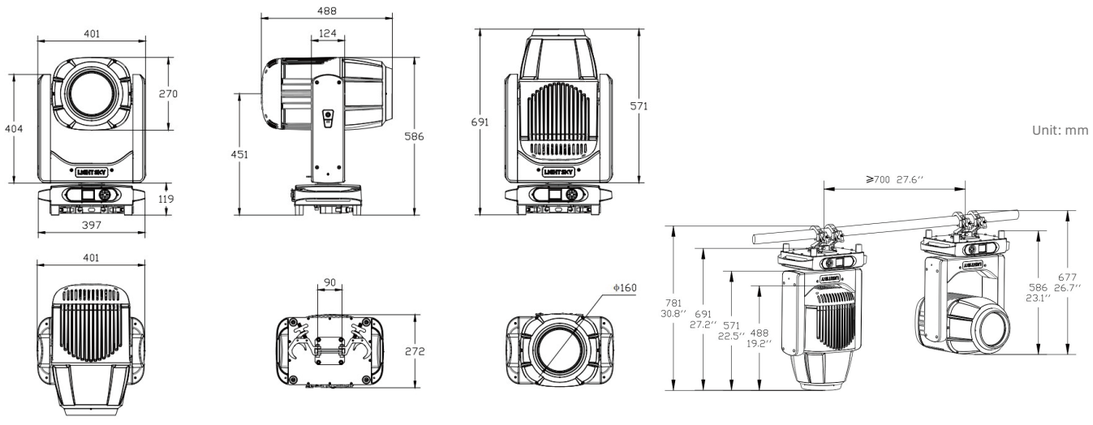



Optics
Light Source: USHIO NSL U8
Zoom Range: Beam mode 1.8°-24°, Spot mode 4°-45°, Wsah mode 2.6°-43°
Front Lens : High-transmittance coating, ϕ 160mm
Colour Temperature Output: 7000K
Total Lumen Output: 16,000 lm
Color Rendering Index (CRI): Ra≥80 (with filter Ra≥88)
Illuminance: 620,000 lx @10 m
Light Source Theory Life Span: 8,000 h

Color
Linear CMY color mixing system
Linear CTO (2800K~7000K)
13 Colors + CRI+ blank, capable of bi-directional rainbow effect, bi-color step gradient (linear movement), color wheel bi-directional rotation, and random color mode

Gobos
Fixed Gobo Wheel: 13 gobos + blank, capable of flowing and shaking effects
Rotation Gobo Wheel: 9 glass gobos + blank, replaceable, capable of rotation, flowing, and shaking effects, gobo outer diameter 14.0mm, gobo inner diameter 9.5mm
Dynamic effect wheel

Effects
5 prisms: 2 beam prisms, 3 spot prisms, bi-directional rotation, independently switchable, stackable
2 frost filters: Adjustable independent soft light effect
Focus: High precision electronic focus
Strobe: 0.5-12 times/sec adjustable pulse and random strobe
Dimming: 0-100% linear adjustment

Color Wheel

13 Colors + CRI+ blank



Function Effect

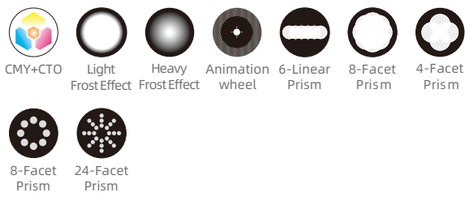

Illumination Diagram

Spot Mode

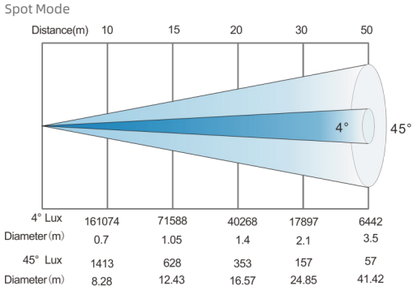

Beam Mode

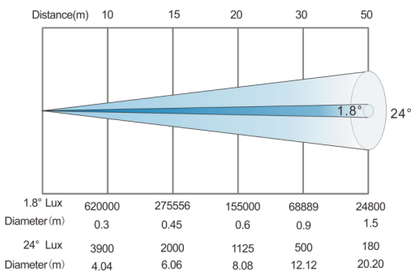

Control and Programming
Control Channels: 33CH, 35CH ,36CH,39CH(see channel chart for details)
Protocol: DMX512, RDM, Art-Net, sACN
Data Connection: 3-pin or 5-pin signal IN/OUT, Art-Net IN/OUT
Display: LCD screen
Software upgrade via DMX interface

Pan/Tilt Movement
Pan: 540°, 8-bit / 16-bit precision
Tilt: 270° , 8-bit / 16-bit precision
Automatic reset with error correction
Pan/Tilt Lock

Power and Electrical
Input Voltage Range: AC 100-240V 50/60Hz
Max Power Consumptionr: 700W
Power Factor: 0.98
Maximum Current of Fixture: 3.18A/220V, 7A/100V

Size and Weight	
Product Dimensions: 401mm × 272mm × 691mm	Net Weight: 31.1 kg
Carton Dimensions: 515mm × 360mm × 825mm	Gross Weight: 36.6 kg

Other
IP Rate: IP66
Operating Environment: -20℃ ~ 45℃
Maximum Surface Temperature of Fixture: 80℃

Factory Configuration
Power Cable: 1 pc (Part No.: C1400050050)
Signal Cable: 1 pc (Part No.: F0200020087)
Safety Rope: 2 pcs (Part No.: F0200010010)
Clamp: 1 pc Compatible with tubes of Ø40-60 mm (Part No.: C0499990062)

Optional Accessories/Packaging
Flycase Part No.: B0101040001
Flycase Dimensions(2 in 1): 870mm x 550mm x 950mm
Flycase Gross Weight(2 in 1): 104.7 kg

Fixed Gobo Wheel

Note: 13 Gobos + blank Circle



Rotation Gobo Wheel

Note: 9 Gobos + blank Circle , Outer diameterϕ14.0mm, Inner diameterϕ9.5mm

